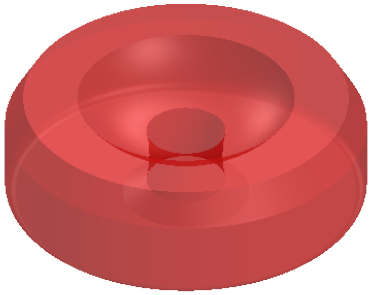

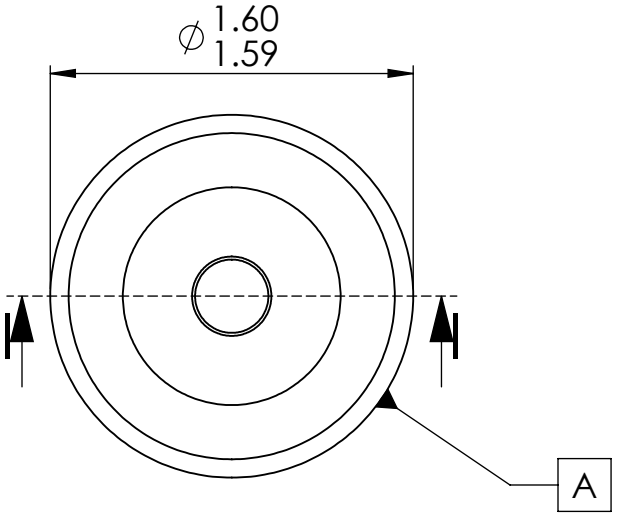

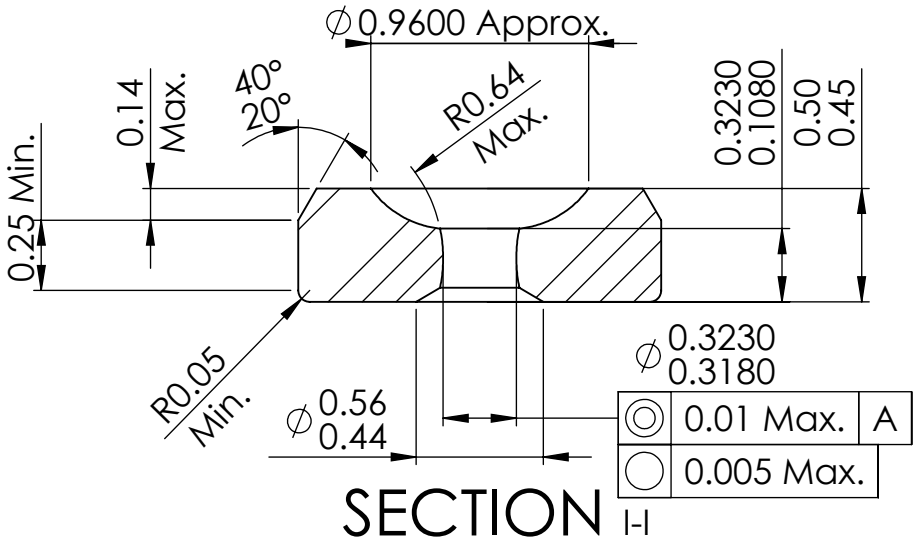

Notes:

1. Break all sharp corners except that intersection of cup and flat surface must be well defined.

FINISH: ID: 0.1 micrometers; Cup & Flats: 0.05 micrometers; OD: Ground		
MATERIAL: RUBY		
Dimensions are all in mm		
	NAME	DATE
DRAWN	CA	8/3/2017
CHECKED	DG	9/11/17
MFG APPR.	JL	8/31/17
Q.A.	SG	9/20/17

DWG. NO. MT7525

DWG. Name. MT7525

SIZE	Description:	REV.
A	OLIVE HOLE SINGLE CUP	A

Microlap Technologies Inc.

213 1st ST NW - POBOX 280
Rolla, ND 58367
701-477-3193(P) - 701-477-6579 (F)
WWW.microlap.com

PROPRIETARY AND CONFIDENTIAL
This drawing and the information contained in the specifications are the exclusive and proprietary property of Microlap Technologies, Inc. This information and materials shall not be disclosed, divulged, reproduced, copied or used in any manner without the express written authorization of Microlap Technologies, Inc. All copies, reproductions, or other duplications of any portion of this information or materials shall include this legend.

SCALE:30:1 | DO NOT SCALE DRAWING | SHEET 1 OF 1